# A REVIEW PAPER ON
# ARDUINO BASED PREPAID METER USING GSM MODULE

[1] Pratik Korde, [2] Nirmit Jain, [3] Dr. Garima Goswami
[1 & 2] UG Student, Department of Electrical Engineering, Faculty of Engineering & Computing Sciences, Teerthanker Mahaveer University, Moradabad(U.P.),
[3]Associate Professor, Department of Electrical Engineering, Faculty of Engineering & Computing Sciences, Teerthanker Mahaveer University, Moradabad(U.P.),

**Abstract: The process of revenue collection in Indian electricity department comprises various stages such as manual meter reading, based on that readings bills are generated and then distributed to each of consumers and industrial premises, which makes it complex and time consuming. Also human errors can't be avoided here. Various researchers had provided effective solution for this problem. A GSM technology can facilitate the users to verify the electricity consumption status and transparency is maintained between electricity department and the consumer as both will have access to continuous monitoring of energy meter. Also the use of GSM technology provides prepayment facility and in other perspective this promotes cashless economy. The use of relay here makes sure that no balance should lead to instant cutoff of electricity in consumer premises. All this system is handled securely by Arduino Uno. For the developing countries like India this will be a better solution for electricity monitoring and billing. It is made in such a manner that it is cost effective and much better than conventional meters. In this paper six research papers have been discussed based on various aspects of pre-paid energy meter.**

**Keywords: GSM module, Arduino Uno, Energy meter, Relay.**

## Introduction

In India, the revenue collection process is slow and lengthy. Also the billing process is manual and requires a lot of human labor. The process involves taking meter readings manually, then processing that reading for costing and generating the bill for the same. This may cause a lot of errors as it is complex and process is not in a centralized control. The distribution of bill to a mapped location also a lot of time consuming process. Here we can't avoid any mistake or error in this process as manual operation is done. All these problems can have a solution by using the prepaid energy meter system. This system provides an automated way of bill payment. It takes the readings automatically and the information is sent to the authority and the consumer too. This will reduce the human effort and will eliminate the complexity in billing process. It also reduces collection form the consumers living in an isolated area and distanced villages and deployment of human labor in such cases.

consumed by domestic, commercial and sometimes industrial users. With the growing population of energy consumers, smart meters are timely innovation which eases the energy management system. Utility companies can monitor consumption, automatically disconnect defaulting consumers, update tariff, and have a secured database and consumption pattern of a mapped location. The consumers on the other end can also monitor their energy consumption in real-time, recharge their accounts, monitor tariff rates and hence improves the demand response. Unfortunately,

the energy sector is bedevilled by several challenges resulting from the deployment of electricity smart meters. They are energy theft, cyber-attacks, mismanagement and erroneous billing etc. and thus, various research aspects to curb the challenges have been ongoing. This paper proffers a solution of reducing human involvement in energy management for both utility companies as well as consumers. All the monitoring and control features are provided access via a dedicated web portal, anywhere, anytime provided there is Internet connection. Efficient usage of electricity has become an important concern worldwide. This has urged utilities throughout the world to shift from conventional electromechanical meters to smart meters which provide better security and control [1],[2].Smart meters equipped with prepayment facility has become a rapidly growing technology because it allows the utilities to manage their cash flow more efficiently [3].Majority of the energy meters currently used in Sri Lanka are electro mechanical energy meters which are gradually being replaced by digital and electronic energy meters [4]. Sri Lankan Power sector is currently focusing on introducing smart meters for domestic consumers as a method of implementing demand side management [4].Prepayment Energy Meter is a veritable tool for electrical energy consumption measurement for both the electricity distribution companies and the consumers. Also, the awareness on the need for more prudent management of energy, especially electricity, demands an improvement on this tool of measurement. The prepayment meter as an electronic equipment is intelligent and therefore is able to keep record of events of its operations in databases. In most traditional prepayment meters, some of these records can only be accessed through the keypad and the display on the screen. This is so because the meters are not made to be accessible wirelessly and therefore they cannot be monitored remotely through wireless means. For example, the unit balance as well as unit consumption cannot be obtained by sending Short Message Service (SMS) to the meters. Again, meters are not able to report last token recharge; time of power failure and restore on demand through SMS from mobile devices. Figure 1 shows the block diagram of proposed prepaid energy-meter module.

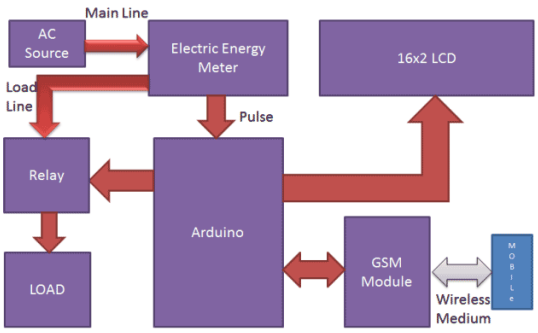


Figure 1. Block diagram of pre-paid energy meter module.

## Literature Review

*In 2017 Nazmat Toyin*et.al.[5] told that energy fuels the growth and development of any country, and as such effective monitoring, measurement, billing and access control is imperative. They presented a device that uses the evolving Internet of Things (IoT) technology in the design and implementation of an Internet based prepaid energy meter often referred to as smart meters. The energy measurement and billing system is automated. The system employs the ATMega328p and ESP8266 to operate a dual core microprocessor unit with one core dedicated to energy sensing and measurements, while the other handles the network connectivity, storage, computations and overall system performance. They used the HTML5 technology to develop a highly interactive mobile and web frontend Graphic User Interface (GUI) application that allows for consumers to have access to monitor and control their consumption pattern while the utility companies can monitor and control customers and their billing systems. They

observed that the IBEPM is an improvement over the conventional prepaid meters; it uses the IoT technology in proffering solutions to the energy monitoring and management. Unlike the conventional prepaid meters, this solution offers a highly interactive GUI interface for both consumers and utility companies. It also automates the energy system, as it relates to achieving a smart grid system. The system has been designed to resort to a local server and database, upon resumption of internet connection, all information are synchronized with the web server. However, it is important to point out that for the purpose of this work, the billing is handled locally by the web server and has not been interfaced with any online payment platform agencies. Also further improvements could be made on the project to include load control on the consumer platform for a high Demand Side Management (DSM).

*In 2016, W.D.A.S. Rodrigo et.al* [6]invested that most of the developing countries are moving in to smart meters equipped with prepayment facility to measure electricity in order to reduce the financial losses faced by utilities due to consumer reluctance to make bill payments on time. Prepaid smart meters enable consumers to effectively manage their electricity usage. But the main drawback of the currently available prepaid meters is their high cost which makes them infeasible for developing countries. Their research work is based on a final year university project on designing and implementing a digital prepaid energy meter which is affordable for domestic consumers in a developing country like Sri Lanka. The prepaid energy meter described in their work is a single phase230V/40A energy meter which consist of a metering devise designed according to theIEC1036 (1996-09) standard and a prepaid module that uses GSM/GPRS technology to communicate with the utility server. The design of a230V/40A single phase digital prepaid energy meter for domestic consumers with improved metering and billing facilities to eliminate major draw backs of existing energy metering systems, has been done. Designing of the metering devise and the prepaid module are explained separately in their work. The major advantage of the designed system is its ability to upgrade the existing energy meters into prepaid energy meters with the attachment of prepaid modules which eliminates the need to entirely replace the energy meter. They ensured that the proposed prepaid energy meter will be very useful for the power utilities in developing countries with large population who use traditional energy meters because upgrading the existing energy meters is more economical than replacing them fully with a prepaid energy meters.

*In 2017 Kumarsagar M.Dange*et.al [7] aimed at a project to minimize the queue at the energy meter billing counters and to restrict the usage of energy meter automatically, if the bill is not paid. The project also aims at proposing a system that will reduce the loss of power and revenue due to power thefts and other illegal activities. The work system adopts a totally new concept of “Prepaid Energy Meter”. The GSM technology is used so that the consumer would receive messages about the consumption of power (in watts) and if it reaches the minimum amount, it would automatically alert the consumer to recharge. This technology holds good for all electricity distribution companies, private communities, IT parks and self-containing housing projects. The implementation of their project will help in better energy management, conservation of energy and also in doing away with the unnecessary hassles over incorrect billing. The automated billing system will keep track of the real time consumption and will leave little scope for disagreement on consumption and billing.It is observed that one of the faulty subsystems contributing to the huge revenue loss in Nigerian Power Sector is the metering and billing system. Errors get introduced at every stage of energy billing, like: errors with electro-mechanical meters, human errors while

noting down the meter reading; and error while processing the paid bills and the due bills. The remedy for this drawback is a prepaid energy billing. There are clear results from many countries, where prepaid system has reduced the revenue loss by a large amount. A GSM-based Energy Recharge Interface which contains a prepaid card equivalent to a mobile SIM card. The prepaid card communicates with the power utility using GSM communication network. Once the prepaid card is out of balance, the consumer load is disconnected from the utility supply by the latching Relay (contactor). The power utility can recharge the prepaid card remotely through GSM/SMS mode base on customer requests. The results obtained shows good system performance. A prior billing is bound to do away with the problems of unpaid bills and human error in meter readings, thereby ensuring justified revenue for the utility. It has been observed that putting a full stop at the wastage of electricity, the problem of load shedding can be dealt with ease. It is being said that half of India still don't get electricity which no longer will be true. Man power will be limited as there won't be any need of personally visiting each and every electricity meter as it was in the earlier days. The monopolistic power distribution market in asia is gradually transforming into a competitive marketplace. Differentiation in service is going to be the key competitive factor to the improve market share in the deregulated power markets prepaid meters with their advantages over conventional ones are likely to help power distributors to differentiate and offer value –added services to consumers. Encourage consumers to opt for prepaid meters on a voluntary basis and offering tariff or non-tariff incentives to those consumers who prepaid their power changes would help the utilities to implement this system.

*In 2018 Henry Erialuode Amhenrior et.al* [8]worked on a Short Message Service (SMS) Based Prepayment Energy Meter Monitoring System for Consumers and Utility Companies is developed. It was told that this is borne out of the desire of consumers to be able to monitor their meters especially their consumption. Also, the utility companies need to be able to monitor energy meters wirelessly especially for energy auditing and other control as may be needed. The Energy Meter consists of ADE7755 for consumption pulse measurement which is recorded by arduino Atmega328P. The recorded pulses are sent to Atmega2560, the main controller of the system on its request for update every second. This controller also manages unit according to consumption and other activities of the meter. It is made SMS capable by interfacing Atmega2560 with SIM900 Global System for Mobile Communications (GSM) module. The system also has a server consisting of Atmega328P and SIM900 GSM module that enables the utility company to access the meter. The server is interfaced to a PC which is used for management and administrative Platform. The SMS communication command is developed in C++ to achieve the monitoring functionality of the metering system. The SMS duration test shows a mean time of 32.7s with a standard deviation of 13.71. The SMS Command Reliability Test carried out shows a success rate as high as 100% and the highest failure rate of 5.88%. The results obtained show that GSM-Based SMS is a good platform for energy meter monitoring. The meter developed in their work uses SMS for communication through the GSM modem. As shown in the Usage Command Development section, several commands are used for communication with the meter for monitoring. Some of the information the communications seek include, unit balance, unit consumed, time of power failure and time of powerre store. Other monitoring communications capabilities of the meter are checking the token recharge into the meter, credit warning alert, wireless meter disconnection and connection. The SMS communication is a two-way communication and this enables the

activities of the meter to be monitored wirelessly. The results obtained show that SMS is very efficient, effective and successful in achieving the monitoring aspects of this work as proposed. The success of recordingn egligible duration in the SMS communication and high success rate in the command reliability test are dependent on the efficiency of the chosen mobile network, though this was not investigated. The outcome of their work shows that the consumers and the distribution companies can communicate with the meter to obtain information through the GSM SMS platform. These information can be used for various purposes for the benefit of both parties especially in energy usage monitoring and auditing. With this, the objective of this work which bothers on communicating and monitoring of Prepayment Meters through SMS has been fully realized.

*In 2015, Shraddha Yadav et.al* [9]presented in their survey that the electricity energy saving scheme is used in business, agriculture, domestic and general purpose. The problem occurs in post paid scheme is, there is no control of use of electricity from the consumer side and the problem of collection of meter reading and also in generating the bill. In their work technique used for prepaid scheme using smart meter included the embedded system and GSM for sending and receiving the SMS through GSM network. Smart meter is a meter which is attached with the existing meter in embedded system which helps the consumer to send a SMS for their day to day power consumption. The aim of their work is to control the consumption of electricity in consumer side. Establish a communication network between the consumer and service provider using GSM. Service provider verify the meter id and card number and
accept the request and recharge the meter. Apart from it their work minimized the queue at the electricity billing countersand to retrieve the electricity automatically. The work also aims at proposing a system that will reduce the loss of power and revenue due to power theft and other illegal activities. The automated billing system will keep doing of real time consumption and will leave little scope for disagreement on consumption and billing. The work also addressed about various debuggingtools such as Keil 4 Vision. Smart meter enable two-way communication between the meter and the central system. Smartmeters are also believed to be a less costly alternative to traditional time of uses meter and are intended to be used on a wide scale with all customer classes. It has been observed that the design of Smart Energy Meter using GSM technology facilitate the users to pay for the electricity before its consumption. An arrangement is also made to intimate the user with the help of GSM communication module when their credit in their balance goes low. This system has been proposed as an innovative solution to the problem of affordability in utilities system. Since a microcontroller based system is being designed, the readings can be continuously recorded. This reduces human labor and at the same time increases the efficiency in calculation of bills for used electricity. This Smart energy understanding device will create awareness on unnecessary wastage of power and will eventually reduce wastage of power. This module will reduce the burden of energy providing by establishing the
connection easily and no theft of power will take place. Customers want processed data and they want the usage of energy data to be easy and user friendly whereas this project aims at a low cost and trouble free system. This system provides elaborate consumer profiling which helps demand and consumption control of resources and thus reduces thehuman operator meter reading operation cost.

*In 2016, Sushant Karadet.al* [10] presented the design and modelling of GSM-based Energy Recharge System for prepaid metering. They told that the present system of energy billing in India is based on post-paid, contains

lots of error and also time and labour consuming. Errors get introduced at every stage of energy billing like errors with electro-mechanical meters, human errors, processing errors. The aim of the developed system is to minimize the error by introducing a new system of Prepaid Energy Metering using GSM. The GSM is used to provide the communication between user and provider. This will enable the user to recharge their electricity account from home. The system is based on LPC2148 microcontroller. Hardware system of LPC2148 includes the necessary devices within only one MCU such as USB, ADC, DAC, Timer/Counter, PWM UART etc. The results obtained shows good system performance and error free. It has been concluded that the design of Smart Energy Meter using GSM technology can make the users to pay for the electricity before its consumption. In this way, consumers hold number of units and then use the electricity until the unit exhausted. If the available units are exhausted then the notification message send to the consumer's registered number and electricity supply is cut-off by a relay. This reduces the human labour and at the same time increases the efficiency in calculation of bills for used electricity. Prepaid Energy Meter will bring a solution of creating awareness on unnecessary wastage of power and will tend to reduce wastage of power. They ensured that their work will reduce the burden of energy providing by establishing the connection easily and no theft of power will take place.

## Conclusion

After reviewing the above six research papers it can be concluded that prepayment systems have been proposed as an innovative solution to the problem of affordability in utilities services. In spite of being a popular system in European and African countries, the use of such mechanisms remains controversial. Among the main arguments in favor of its dissemination are the advantages concerning lower costs of arrears, running costs and finance charges for the service provider and the better allocation of resources it implies for users. The arguments against prepaid meters are based on the higher cost of the technology and the possibility of self-disconnection of low-income users. The monopolistic power distribution market in Asia is gradually transforming into a competitive marketplace. Differentiation in service is going to be the key competitive factor to improve market share in the deregulated power markets. Prepaid meters with their advantages over conventional ones are likely to help power distributors to differentiate and offer value-added services to consumers. Encouraging consumers to opt for prepaid meters on a voluntary basis and offering tariff or non-tariff incentives to those consumers who prepay their power charges, would help the utilities to implement this system. It would be a better option for the areas where more amount of consumers with unpaid bills are found. The topmost and the perfect solution for the consumers who don't pay there bills on time. Apart from this the information flow among the consumers surely will lead to better utilization of the energy.

## References

[1] M. Anas, N. Javaid, A. Mahmood, S. M. Raza, U. Qasim and Z. A. Khan,"Minimizing Electricity Theft," in 2012 Seventh InternationalConference on P2P, Parallel, Grid, Cloud and Internet Computing,Victoria, BC, 2012.

[2] A. de Souza, D. Gastaldello, F. Fernandes and Z. Vale, "Smart meters asa tool for energy efficiency," in Industry Applications (INDUSCON),2014 11th IEEE/IAS International Conference, Juiz de Fora, 2014.

[3] K. Ramadan, E. Zakaria and D. M. Eltigani, "Prepaid Energy MetersNetwork via Power System Communication," in Computing,

Electricaland Electronics Engineering (ICCEEE), 2013 International Conference,Khartoum, 2013.

[4] PUCSL, "Public Utilities Commission of Sri Lanka," July 20 13.[Online]. Available:http://www.pucsl.gov.lk/tamil/wp-content/uploads/2013/07/Smart-Metering-in-Sri-Lanka-Final.pdf.. [Accessed 23 102015].

[5] Nazmat Toyin,Olufenka AYODELETimilehin,David OLORUNTOBAAbdulrahaman Okino OTUOZENasir FARUK, " Development of an Internet Based Prepaid Energy Meter" IEEE 3rd International Conference on Electro-Technology for National Development (NIGERCON) 2017.

[6] W.D.A.S. Rodrigo, H.K.I.S. Lakmal, N.S. Roshani, S.W.M.G.S. Samarakoon, and S.S. Samararatne "A Prepaid Energy Meter Using GPRS/GSM TechnologyFor Improved Metering And Billing" International Journal of Computer Science and Electronics Engineering (IJCSEE) Volume 4, Issue 2 ISSN 2320–4028 2016.

[7] Kumarsagar M.Dange,Sachin S. Patil,Sanjay P. Patil "Prepaid Energy Meter using GSM Module" International Journal of Engineering Science InventionISSN (Online): 2319 – 6734, ISSN (Print): 2319 – 6726Volume 6, Issue 2, February 2017, PP. 80-85.

[8] Henry Erialuode Amhenrior "Development of an SMS-Based Prepayment Energy Meter Monitoring System for Consumers and Utility Companies" American Journal of Embedded Systems and Applications 6(1): 37-45ISSN: 2376-6069 (Print); ISSN: 2376-6085 (Online) 2018.

[9] Shraddha Yadav, Prateekshapandey " A Survey Paper on Prepaid ElectricityDistribution System" International Journal of Application or Innovation in Engineering & Management (IJAIEM)Volume 4, Issue 12, ISSN 2319 – 4847December 2015.

[10] Sushant Karad1, Yogesh Kadam, Kalyani Jagtap, Pooja Ghadge "Gsm Based Prepaid Energy Meter" International Journal of Advance Engineering and ResearchDevelopment, Volume 3, Issue 4, April -2016.